YLI ELECTRONIC

# Door Loop for Mortise Mounting

## Model: DLK-402/402-SS/402L/402L-SS

## Basic Instruction

Door loop is made of excellent material, Seiko quality, Special design, Applicable to use foraccess control, to protect the wire when install the electric lock, magnetic contact, alarm button on the door, convenient and beautiful.

## Specification

### DLK-402/DLK-402-SS

Size: 290Lx24.4Wx12H(mm)DIA(DLK-402)

300Lx24Wx13H(mm)DIA(DLK-402-SS)

Suitable Range: Prevent the wire from malicious damage

Standard Structure: Alloy Material(DLK-402)

Stainless steel Materials(DLK-402-SS)

Finished for Shell: Painted by high temperature

Weight: 0.27kg

### DLK-402L/DLK-402L-SS

Size: 542Lx24Wx12H(mm)DIA(DLK-402L)

518Lx24Wx13H(mm)DIA(DLK-402L-SS)

Suitable Range: Prevent the wire from malicious damage

Standard Structure: Alloy Material(DLK-402L)

Stainless steel Materials(DLK-402L-SS)

Finished for Shell: Painted by high temperature

Weight: 0.4kg

## Dimension

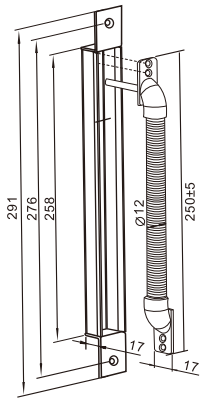


DLK-402

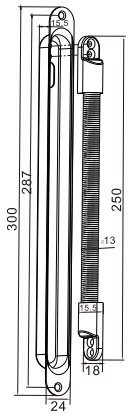


DLK-402-SS

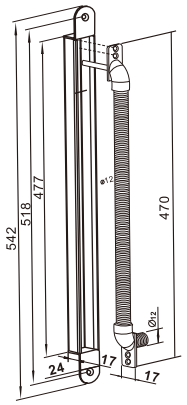


DLK-402L

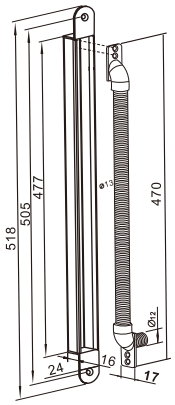


DLK-402L-SS
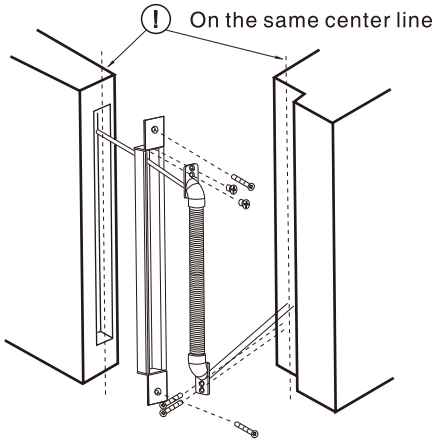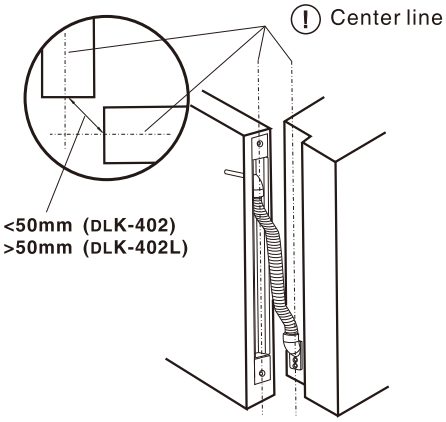
## Installation